DIAMOND Jet

3 YEAR WARRANTY

WHERE POWER MEETS PRECISION.

Two machines on one bridge. The saw takes the straight cuts at speed, the 60,000 psi waterjet takes the curves, tight radii and inside corners — and the slab never moves between them.

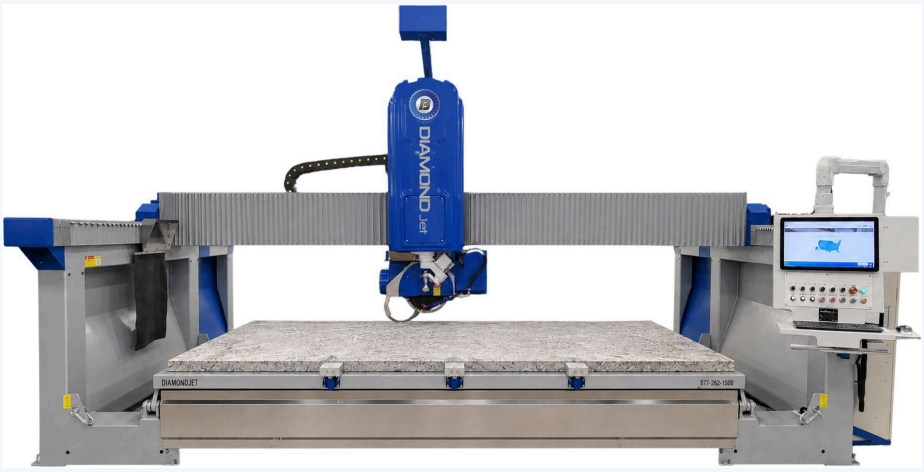

WHY SHOPS CHOOSE THE DIAMONDJET

VERSATILITY
Straight cuts, contours, inside corners and intricate inlay on a single setup.

SPEED
The blade does the long cuts; the jet only runs where a blade cannot go.

YIELD
Nesting and a narrow jet kerf put more finished product out of every slab.

PRECISION
Five-axis ESA control and laser guidance hold ±0.004″ across the envelope.

KEY FEATURES

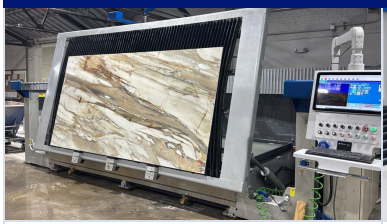

EZ TILT-TABLE LOADING
The table tilts upright to take a slab off the A-frame and lays it flat — one operator, no second lift.



SAW SPEED ON STRAIGHT CUTS
A 35 HP saw motor takes rips and crosscuts at full production pace.

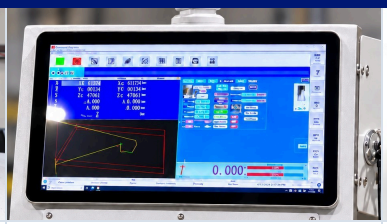

19″ TOUCHSCREEN & PEGASUS
Full Pegasus CAD/CAM with nesting, a wireless pendant, and TeamViewer for remote support.



KMT 50 HP INTENSIFIER
A KMT H2O JET 50 drives the jet at 60,000 psi for curves, tight radii and inside corners the blade cannot reach.

EQUIPMENT & FEATURES

- Precision 5-axis control
- 19″ premium touchscreen HMI
- EZ tilt-table
- Premium ESA drive system
- Automatic lubricator
- Laser-guided cutting
- Pegasus CAD/CAM suite & nesting
- TeamViewer remote support

BUILT FOR

- Straight cuts
- Curves & radii
- Inside corners
- Sink & faucet cutouts
- Inlay & medallions
- Waterfall ends
- Countertops & vanities
- Granite, quartz, porcelain & glass

WHAT'S INCLUDED

- 3-year warranty
- Professional installation & training
- Lifetime remote support
- One blade

FLEXIBLE FINANCING

Flexible terms on approved credit. Ask your Project Manager for a payment quote on this machine.

DIAMOND Jet

TECHNICAL SPECIFICATIONS

CUTTING

AXES	5 + waterjet
SAW MOTOR	35 HP (26.4 kW)
BLADE DIAMETER	14–18″
MAX BLADE, SAW ONLY	25.6″
MAX BLADE, WITH WATERJET	19.7″
INTENSIFIER	KMT H2O JET 50
INTENSIFIER POWER	50 HP (37 kW)
MAX JET PRESSURE	60,000 psi
MAX CUT THICKNESS	3.9″
MAX LIFTING STROKE	12.6″
CUTTING PRECISION	±0.004″

CAPACITY

WORK ENVELOPE X	138″
WORK ENVELOPE Y	79″
WORKTABLE	165″ × 87″
TABLE TILT	Yes — upright loading
OVERALL WIDTH	237″ (19′ 9″)
OVERALL DEPTH	150″ (12′ 6″)
OVERALL HEIGHT	122″ (10′ 2″)
INSTALLED FOOTPRINT	21′ × 14′ × 10′
GROSS WEIGHT	22,000 lb
CONTROLS	Italian ESA CNC
INTENSIFIER UNIT	58″ × 47″ × 42″, 2,260 lb

SITE REQUIREMENTS

SERVICE	220V, 3-phase
MACHINE BREAKER	60 amp, own disconnect
CHILLER BREAKER	30 amp, own disconnect
INTENSIFIER BREAKER	225 A, 3-pole, own disconnect
AIR	100 psi, 40 cfm
WATER (ONE FRESH)	2 lines, 8 & 10 gpm
INTENSIFIER WATER	3.0 gpm at 75°F, 35–100 psi
INTENSIFIER LOCATION	Indoor, 40–104°F, low dust
INTENSIFIER CLEARANCE	36″ all sides, level floor
FLOOR	Level concrete
SIDE CLEARANCE	36″ minimum
UNLOADING FORKLIFT	20,000 lb, 8′ forks
INSTALL FORKLIFT	18,000 lb, 8′ forks

DIMENSIONAL DRAWINGS — ALL DIMENSIONS IN INCHES

FRONT ELEVATION

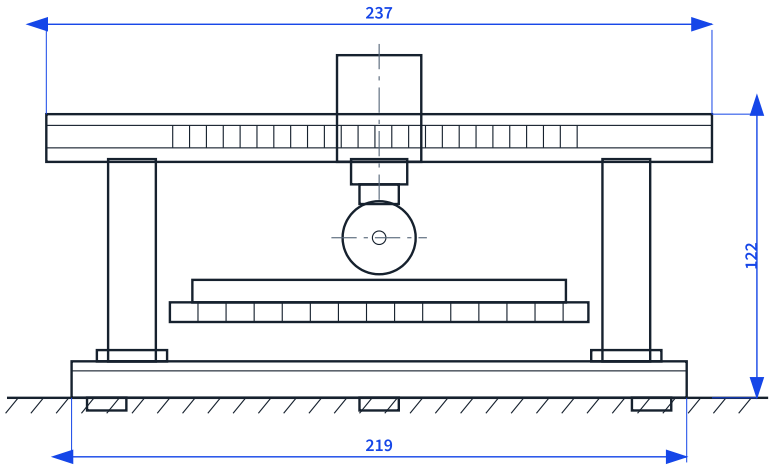

SIDE ELEVATION

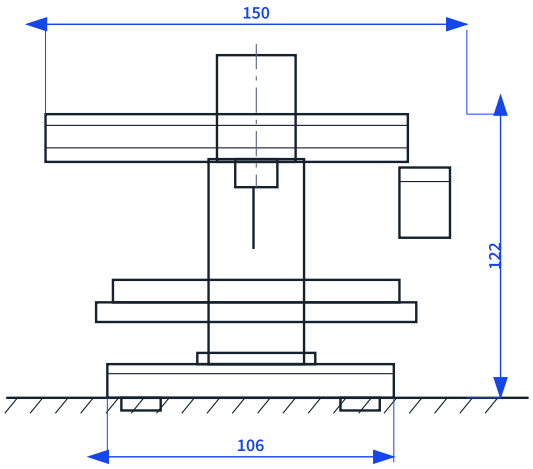

FOUNDATION & ANCHOR PLAN — TEN PADS

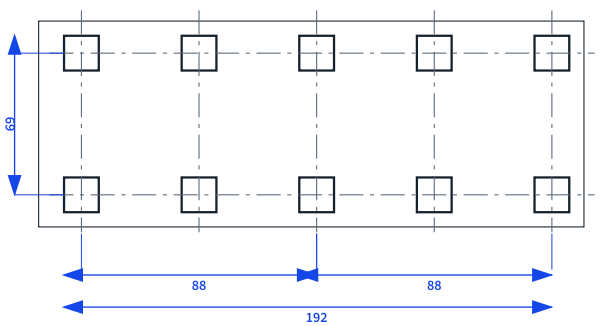

REQUIRED WORKING CLEARANCE — PLAN

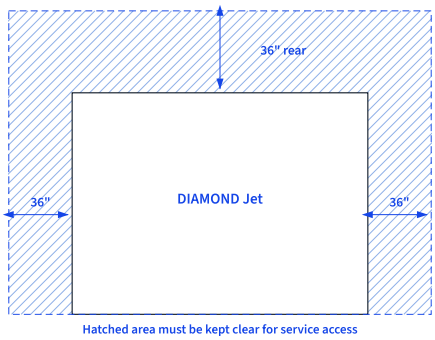

Dimensions are nominal and subject to change without notice. Confirm site conditions with your Project Manager before ordering. Machine placement, unloading and rigging are the customer's responsibility; a full site-preparation checklist is provided ahead of installation.